$2.00 VOLUME 2 · 1987

R/D COMPUTING

VER 24
JUNE

Dedicated to TI 99/4A and 9900 Computer Systems

.....Ryte Data.....

210 MOUNTAIN STREET,
HALIBURTON, ONTARIO K0M 1S0
(705) 457-2774

Yes, This is the June issue... V24 Volume 2. Our apologies for the lateness and for receiving two issues at the same time.

We have reached a crossroad with the TI "market". In scientific circles it is referred to as "publish or perish". In this circle it is known as "expand or vanish". Not an easy choice... having invested a great deal of time and large sums of money into the vision of increasing support for the TI 99/4A community.
Let's get blunt. We have to expand our subscriber base dramatically. Period. We made an offer to all our

subscribers... without ONE taker! We have sent catalogues to thousands of TI owners for two years now.

As Jonathan Zittrain said in Computer Shopper, "it is difficult to make a buck in the TI market." Hey, it's hard to make a thin dime.

It is a fact that all of you DO appreciate the work involved. The problem here is one of meeting costs (profits? ha!) with sufficient funds - from orders and/or new subscribers.
We cannot finance a venture that does not provide a fair "return". The bank, backers and available cash will not allow this to continue. All we are asking is to find one (or two!) new subscriber from each of you who DO support us or from the users groups.

What we'll do here is reserve final judgement until the end of September.

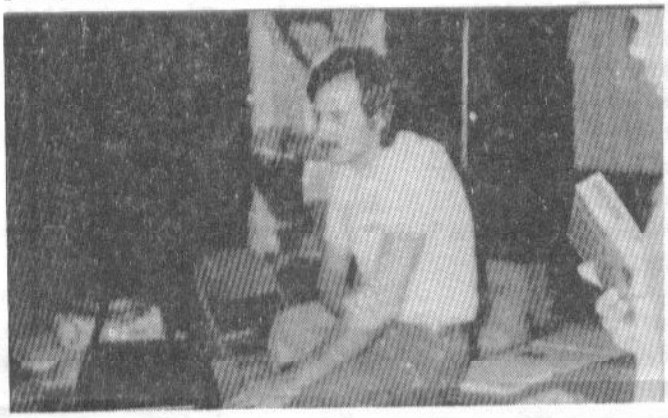

One noteable TI support company has said that "hardware is the only product that has a chance in the TI market... just because it is difficult to pirate." This may be the final option open here.

Then again, all the German hardware has met with a less than enthusiastic response. How does an inquiry level of .0006% grab you? Millers Graphics opted to cease production on the GRAMKRACKER.

Several hardware projects we've SEEN have never been produced. The risk seems to outweigh the response.

As Jonathan Zittrain also said in the Computer Shopper article; "We, as users, must decide to what extent we will support our remaining commercial firms. We must also consider what we are doing to support those innovators who have supported us so greatly in the past... This need not be a question of guilt or morality. The problem can be phrased is simple material terms: without a significant

shift in the balance of those who take compared to those who give, everyone will lose... what TI users can do is help themselves."

All of this has a great deal to do with the Great Debate referred to in the last issue. Terrie Masters has some timely comments:

The best that Richard Mitchell can do with his fine Smart Programmer is not good enough for those who demand it be exactly on time, and accuse him of cheating them ala HCM. Richard is a full time employee with an excessive amount of expected overtime, he is a husband and parent with at least the same amount of domestic stress lots of us have to deal with. All this in addition to singlehandedly compiling a fine publication. Why is this not recognized as the best he can do at this time?

Barry Traver, his sharing of himself on both Compuserve and GEnie give him an extra dose to be aware of his best not being enough. It indeed does pain him that the remarkable Genial Traveler is not as timely as he had hoped. Just in the last month he felt compelled to spend an incredible amount of postage money to let us know an issue was imminent, just to follow it up with an errata notice. Anyone with paper and pencil can calculate the cost of 9 disks, 6 mailers, two postcards per subscriber and come in way over the $30.00 subscription fee. In addition to the two data networks, Genial Traveler, Genial Computerware, Barry home-schools John Calvin and Preaches. Where is his best not enough?

Craig Miller, his best was a red flag challenge to a certain mentality to break and circulate. These then have their defenders ad nauseum, those who publically stand up for Craig are called irrational Miller worshippers. Really! Now a certain few are using words like "cheat" "steal" "deserter" "traitor". Based on what? Not facts that is for sure. Turbo-XT was Tritons idea, not visa versa. It was geared to the console and tv set, (by far the majority). Deserter? just who do you think designed the new fantastic Super Extended Basic module.

Step down off the vituperative soap box and recognize the destructiveness of this parochial pontificating. Recognize the unsung productive persons within your group, be they young or old, sophisticated or down home; encourage and reveal them. Is your glass house without streaks? We can all learn from one another. I can't program (or haven't), but I can sure appreciate Tom, George, Craig, Doug, Mike, Peter, Barry, Richard, Chris etc. I am enriched by them, they produce action not drivel.

- Terrie Masters LA Users Group

I would like a show of hands from all those who are in business for themselves. Okay. Now I would like a show of hands from all those who would like to risk large amounts of cash (and larger amounts of time) to support 2.5 million TI 99/4A owners.

Fine! This then is an open invitation to participate in a meaningful way: send us a new subscriber, show your friends the issues, encourage owners to utilize their investment, bring a new member to a group meeting, provide us with an article, program, comment or something... or if you have more to offer, we would be very willing to discuss royalties, projects etc.

Don't get us wrong - the results of insufficient "returns" ONLY provide for a one way ticket to bankruptcy. We do have new investors which guarantee that we won't go under... but they do have to see evidence that the vision is more than a dream. If you can encourage one or two new subscribers, we can continue to return the energy manyfold. We trust that you fully understand the points made!

Further, we truly hope that the above comments provide food for thought and that a commensurate level of action (rather that backlash) results.

CORCOMP TRIPLE TECH MODIFICATION PROJECT

by EDWARD A. HALLETT

SOUTHWEST NINETY-NINERS

The CORCOMP TRIPLE TECH CARD comes WITHOUT a LED on the front of the card like the other cards for the TI EXPANSION BOX. This project consists of TWO DIFFERENT modifications. The first installs a LED that will light whenever the "CLOCK" portion of the card is accessed. The second installs a TRI-COLOR LED instead that will light one color whenever the "CLOCK" portion of the card is accessed and will light a second color whenever there is DATA in the "BUFFER" portion of the card.

::::::::::::::::::::::::::::::::::::::

CAUTION: THIS MODIFICATION IS SOLEY UNDERTAKEN AT YOUR OWN RISK AND MAY VOID YOUR CORCOMP WARRANTY.

::::::::::::::::::::::::::::::::::::::

The first modification is quite simple as CORCOMP made provisions for a LED on the TRIPLE-TECH card but never utilized it. On the very early versions of the card a LED was installed but was disabled. This was because the LED was apparently mounted in the wrong location on the card and would not line up with the PLEXIGLASS WINDOW of the TI EXPANSION box. The LED was therefore disabled by burning it out. To restore its operation install a new LED in place of the old one and bend its leads so that the LED lines up with the PLEXIGLASS WINDOW. On later versions of the card NO LED has been installed but the provisions for one are still there.

1. Install a 100 OHM RESISTOR in the location marked "R1" at the BOTTOM LEFT CORNER of the card. (With the components UP - edge connector at the bottom)

2. Install a LED in the position marked "LED" next to U6. CATHODE end (flat side or short lead) in the lower hole.

NOTE: For proper alignment with the PLEXIGLASS WINDOW the LED should be positioned in line with U6 with the base of the LED butted up against the end of U6. Do not short any pins!

This LED will light momentarily whenever the "CLOCK" portion of the card is accessed.

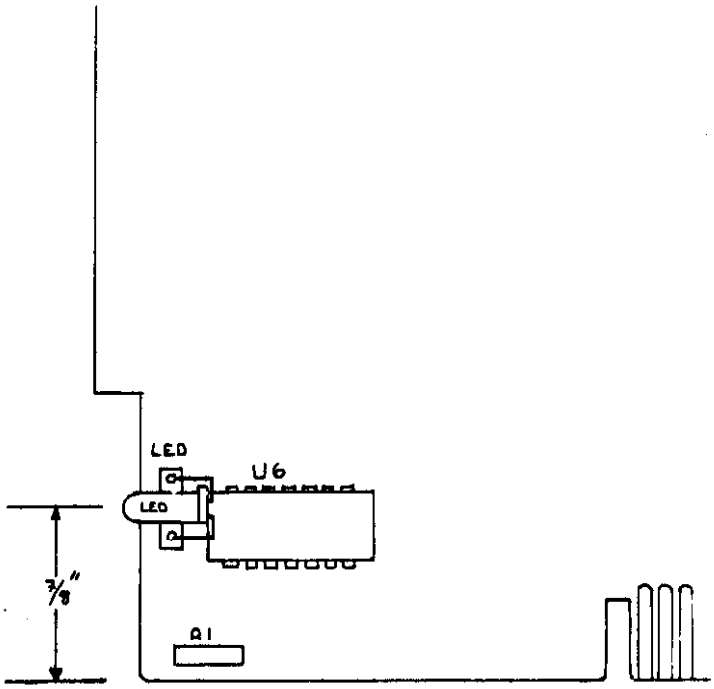

The second (ALTERNATE) modification adds a TRI-COLOR LED that lights one color when the "CLOCK" portion of the card is accessed and lights a second color when there is DATA in the "BUFFER" portion of the card.

1. Install a 100 OHM RESISTOR at the location marked "R1" at the BOTTOM LEFT CORNER of the card

2. Install a NAND GATE (74LS00) PIGGYBACKED on top of U8. Connect PINS 7 AND 14 to the CORRESPONDING pins below. BEND PINS 1 THRU 6 and PINS 8 THRU 13 outward.

3. Install a TRI-COLOR LED (RADIO SHACK # 276-035) at the location marked "LED" next to U6 by connecting

ONE LEAD to the LOWER CONNECTION POINT and connecting the OTHER LEAD to PIN 11 of the new NAND GATE.

4. Install a 2.7 K OHM RESISTOR between PIN 12 and PIN 7 of the new NAND GATE.

5. Install a 2.7 K OHM RESISTOR between PIN 13 and PIN 14 of the new NAND GATE.

6. Install a 1N34A DIODE, connecting the CATHODE (BANDED END) to PIN 12 of the new NAND GATE.

7. Connect a 7 INCH LONG JUMPER WIRE from the DIODE'S ANODE LEAD to the SOLDER PAD directly above the LETTERS "U25" at the RIGHT HAND SIDE of the card.

NOTE: THIS SOLDER PAD IS CONNECTED TO THE BUSY LINE TO THE PRINTER.

PINS 1 THRU 6 and PINS 8 THRU 10 of the ADDED NAND GATE are not used and are left NOT connected.

This LED will momentarily light one color whenever the "CLOCK" portion of the card is accessed and will light a second color whenever there is DATA in the "BUFFER" portion of the card or flash the second color as DATA passes thru the "BUFFER" to the printer. This completes the TRI-COLOR LED modification.

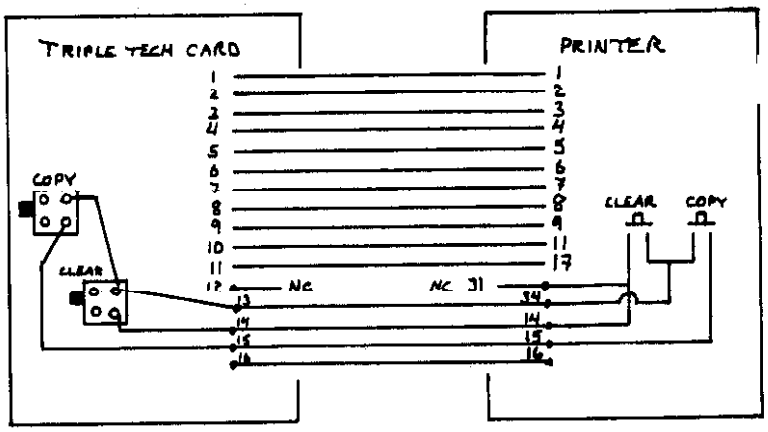

For those who wish to have REMOTE "COPY" and "CLEAR" buttons for the TRIPLE TECH here is a new approach. Pins 13, 14, and 15 of the printer jack of the TRIPLE TECH card are not used by the card. By connecting these three pins to the "COPY" and "CLEAR" switches on the card the REMOTE switches can be mounted on the PRINTER ITSELF! Pick up these three lines thru three UNUSED pins on your printer's PIO jack and run them to two REMOTE switches you install on the printer. (PINS 14, 15, 34, 35, and 36 are UNUSED on STAR MICRONICS SG10 printers) Check your manual!

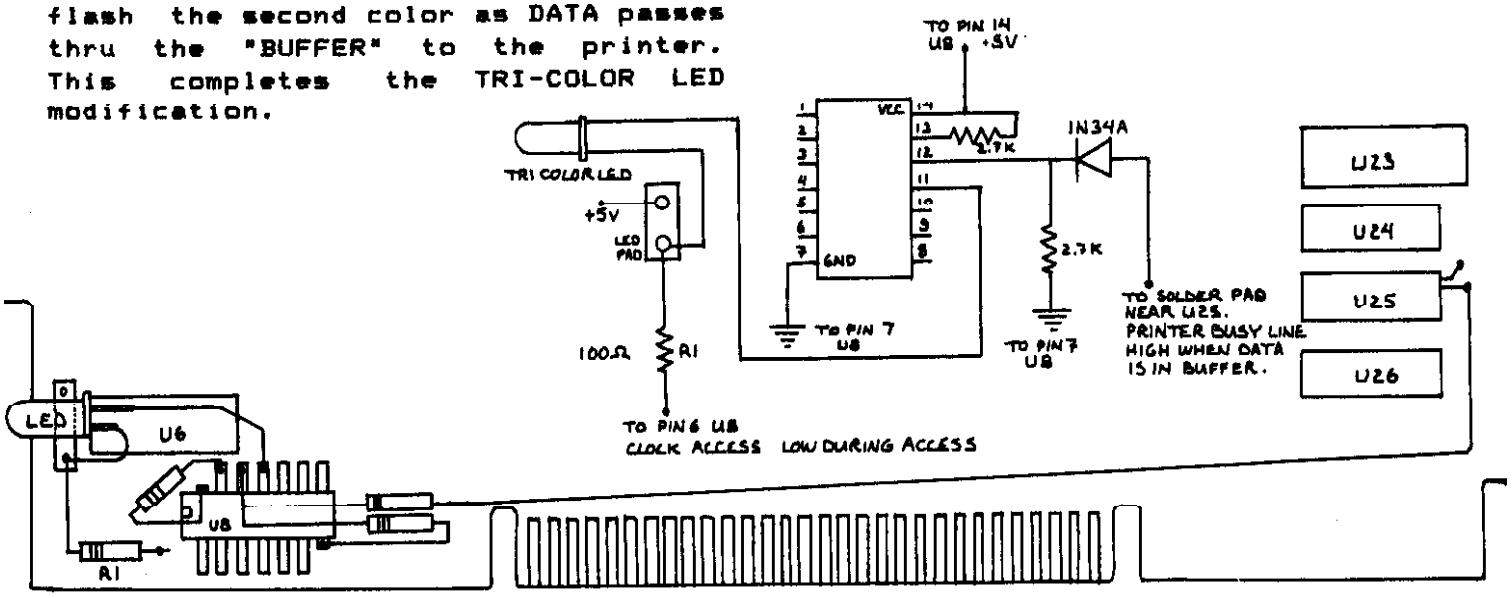

THE DIODE AND RESISTOR MAY BE MOUNTED ON TOP OF U8.

Questions concerning these modifications should be sent to:
SOUTHWEST 99ER'S, P.O. BOX 17831.
TUCSON AZ 85730
ATTN: EDWARD HALLETT, V.P.

80 Column display #2:

DIJIT SYSTEMS introduced its latest product at the 99/Fest-West 87 in Los Angeles May 16th, 1987: The Advanced Video Processor Card. The AVPC fits into the Peripheral Expansion Box and is compatible with existing TI 99/4A software. It features 80 column text, advanced graphics and up to 512 colors. The DIJIT SYSTEMS card contains 192k of video RAM and is designed to work with the DIJIT-EYEzer, and external Gen-lock and video digitizing accessory. This will allow titling and graphic overlays on home videos as well as computer manipulation of external video images.
The DIJIT Systems AVPC gives the TI 99/4A video processing power comparible with the Atari ST and Amiga.

After seeing the side port version, Tom Spillane of DIJIT Systems decided that a different version for the Peripheral Expansion Box was a logical product. If you recall, DIJIT markets an RGB monitor interface for the TI 99/4A.
In following up the information, I spoke with Mr. Spillane at some length regarding their 80 Column CARD. It works with most existing software, has a palette of 512 colours, built-in interface for mouse and light pen input as well as working with Basic, Extended Basic and Assembly language.

The approach taken by DIJIT neatly addresses the problems of providing for 80 column display from the PEB: the necessary information is placed on the bus and is decoded on the card - rather than relying on the information from the 9918A VDP (Video Display Processor). This gives the "AVPC Card" additional flexibility and ability to perform other functions.

DIJIT recommends the Magnavox HCM 515 RGB monitor for analog video with their unit. According to Mr. Spillane a video digitizer unit will be the primary application with additional software being made available by independent programmers - such as David Allan and others.

The retail price will be $195.00 direct from DIJIT Systems, 4345 Hortensia Street, San Diego, CA 92103 Phone: (619) 295-3301

Release is scheduled for August 1987. We have several of the DIJIT Systems devices on order.

Mechatronic 80 Column Device?

Remember the 80 column card from Mechatronic? We promised to do a review at a later date. Well, after MONTHS of fruitless effort, we have been unable to obtain the correct EPROM from Mechatronic.
(Monty sent us another EPROM, but still not the 'correct' version.)
The device's "documentation" was even worse than usual. Illegible notes and NO information on programming the new VDP chip was all that was received.
Needless to say, we were never able to get everything worked out to our satisfaction. Letters and phone calls to Mechatronic have gone unanswered.

The pity is that we had 786 advance orders on the device to be filled upon delivery. According to T.A.P.E. Ltd. a mere 24 units have been shipped to North America. Obviously there is little incentive to go further with attempting to assist owners obtain one of these devices.
On another front, Bernardt Mueller of Mechatronic made an agreement with Monty Schmidt to write the software for the 80 column peripheral. After doing the work to produce an 80 column TI Writer and other programs, it seems that they became unwilling to fulfill their end of the bargain.

So much for that device. As Peter Hodie put it, the DIJIT Systems AVPC appears to have better support - even at this point.

Those of you who were waiting for the availability of the Mechatronic device, call DIJIT with your support!

RGB CONVERSION - PART TWO

by Steven Schmitt

Since last fall when I reported on how to modify the TI 99/4A console with a TMS9928A video processor to improve the screen resolution, I have made progress on both the circuit described in the previous article and on a RGB converter circuit.

The previous article described how to generate a high bandwidth monochrome signal and a composite video signal for color generation. Since then I have changed the mixer circuit from one using the LM318 operational amplifier to a mixer using two Radio Shack transistors. The revised circuit is very similar to one shown in National Semiconductors applications sheet for the LM1889. As far as its performance goes, it does not offer any advantages over the previous mixer but the parts are easier to obtain.

Mr. Jack Miller has been very helpful. He has evaluated the circuits and helped correct several documentation errors. He also reported that it is very easy to slightly modify either circuit to generate Commodore video. Commodore video uses two signals, one being a luma signal and the other is a chroma signal. When used with a Commodore 1802 monitor the results approach RGB quality as the modified circuits generate better Commodore video than a C64 does.

As a help to those who want to attach a monitor in this manner, my teenage son has agreed to etch PC boards for $17.00. So far we have made about a half dozen boards and they all turned out quite well. If anyone wants to have a go at making their own PC boards, I can send copies of the parts list, card layout, instructions etc. for $5.00.

The RGB board was much more difficult to design than I originally thought it would be. TI intended to use the TMS9928A video processor to drive analog RGB monitors such as the Apple IIGS uses. To accomplish only that requires some fairly simple mixers. TI has published the detailed circuits that are needed. However, the lowest priced RGB monitors are the TTL (transistor to transistor logic) types, usually advertised as IBM P.C. compatible. In addition, the new Triton TURBO P.C. also uses a TTL-RGBI monitor so it made sense to try to design an interface circuit to attach the same type of monitor to the 99/4A. In this regard I was fairly successful but the circuit does have some limitations. The following detailed discussion will point out the limitations and give insight to its operation.

Standard televisions use low resolution picture tubes that can display, at most, about 300 lines across the face of the tube. Most composite monitors use the same picture tubes - so they are limited to 40 column resolution. Display of 80 columns with 8 pixels per character requires a resolution of 640 lines. RGB monitors use very high resolution picture tubes! which is the reason they cost so much. Attaching an RGB monitor to a 40 column computer like the TI 99/4A results in a display which is almost breathtaking.

The standard P.C. compatible RGBI monitors use TTL level inputs which are either on or off. The four inputs needed to generate 16 colors are: red, green, blue and intensity. An additional composite sync signal is needed for the horizontal and vertical sync pulses. Table 1 shows a comparison of the colors available from an RGBI monitor and the 16 colors from the TI 99/4A. In reality, neither standard has 16 colors, they both have 15 colors of which there are 13 which are similar or the same. The missing colors that the TI has and RGBI does not are medium red and medium green. For these two colors dark red and dark green will be used.

The circuit board was designed to generate TTL signals from the three analog signals available from a TI

NEW! FROM THE CREATORS OF BANNER '99 AND EXTENDED BUSINESS GRAPHS.....

JOY PAINT '99

(C) Copyright 1986

ENTIRELY JOYSTICK CONTROLLED!!

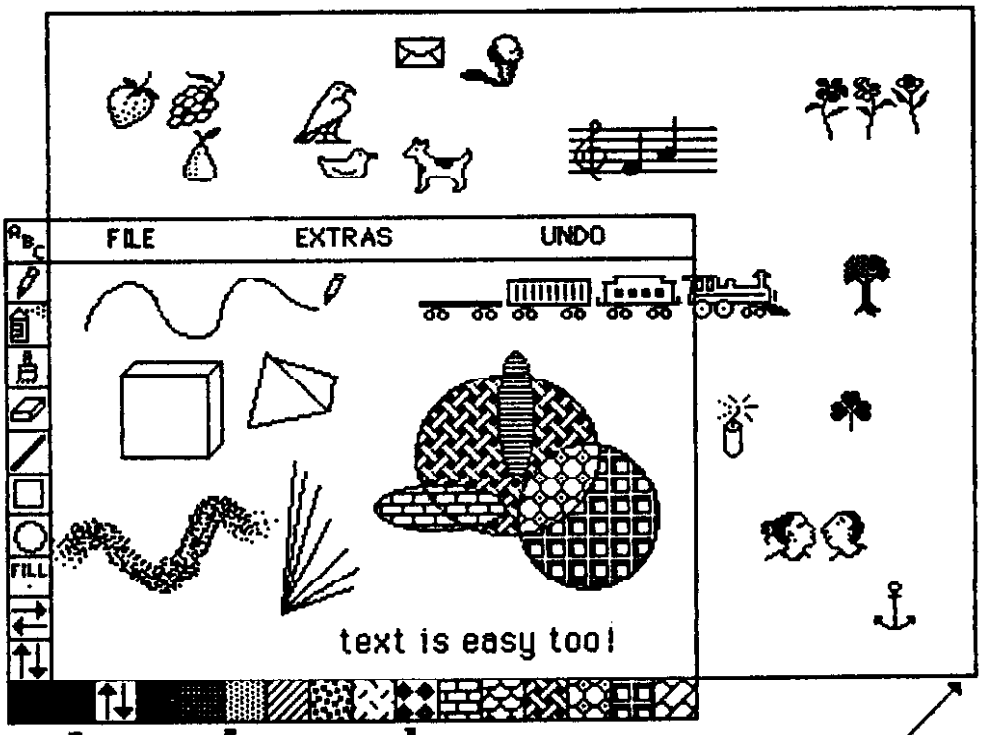

USE TOOLS, SUCH AS PENCIL, ERASER, PAINT BRUSH CIRLCE, OVAL BOX, LINE & TEXT!

92% MORE GRAPHICS SPACE THAN PREVIOUS TI GRAPHICS PROGRAMS!!

THE SCREEN ACTS LIKE A WINDOW!

$39.95

screen size

Joy Paint'99 graphics page size
(shown smaller than actual print size)

REQUIRES
TI-99/4A, 32K, Disk drive, Joy Stick, and one of the following: Extended Basic, Editor/Assm, or Mini-Memory.

Epson compatible printer such as Gemini 10x or 15x, TI impact, etc. is optional.

(soon other printers too!)

Our all new 100% assembly language program features graphic capabilities found in no other software application. Use JOY PAINT '99 to create signs, charts, diagrams, advertisements, or graphics of any type. JOY PAINT '99 is sophisticated, yet simple to use. In fact, the user never needs to touch the keyboard; all functions are joystick controlled. There are no complicated function keys to remember, just simple on-screen TOOLS. JOY PAINT '99 allows circles and ovals to be drawn with incredible speed and precision. Lines, boxes and rectangles can also be quickly drawn! Additionally, the FILL, PAINT BRUSH, and SPRAY-CAN tools allow filling and painting in any one of twenty six selectable PATTERNS! JOY PAINT '99 also feature 8 different brush shapes!

A 'pull down window' contains many more features that make creating and manipulating graphics fun and easy. Any object can be INVERTED, ROTATED, FLIPPED VERICALLY or HORIZONTALLY, COPIED, MOVED, OR STORED ON A CLIPBOARD! A MAGNIFY feature allows graphics to be increased. A ZOOM OPTION, called FATPIXELS, allows fine single dot editing.

JOY PAINT '99 also contains dozens of features not found in any other graphics application. For instance an 'UNDO' feature that instantly 'takes back' the last portion of work the user performed! Its DIRECTORY feature can catalog your diskettes! JOY PAINT '99 CONSERVES DISK SPACE, by not saving the redundant blank areas in your graphics! Printouts can be made directly in normal, or double size, and in single or double density! Be among the first to experience this unique and practical program; ORDER YOURS TODAY.....$39.95 POSTPAID.

COMING SOON:
JOY PAINT '99 COMPANION!
With hundreds of pre-designed graphics!

GREAT LAKES SOFTWARE

804 E. Grand River Ave., Howell, MI 48843

99/4A console modified with a TMS9928A video processor. To keep things interesting, another table with a lot of obscure data is shown in figure 2. The first three columns give the voltage levels of the three analog signals generated by the TMS9928A video processor. These voltages were measured when the initial display was on and the signals were D.C. restored to show both positive and negative values. Shown in the next three columns are the algebraic sums of the input voltages needed by the circuit. For example: R (red) is the sum of the R-Y and Y input signals while B (blue) is the sum of the B-Y and Y inputs. Green is formed by the equation shown in figure 2. The last 4 columns are the desired TTL levels needed to drive a RGBI monitor.

The interface circuit consists of two amplifiers with D.C. restoration followed by four comparators to generate the TTL-RGBI outputs. A comparator is a device which compares its two inputs and if the (+) input is a few millivolts higher than the (-) input the output goes to a TTL high level. These devices are very similar to operational amplifiers and most of the common ones are quite slow with delays of 80 nanoseconds or more. Because a single pixel is only about 200 nanoseconds wide, the circuit requires very high speed comparators. The Signetics NE521 with a delay of 12 nanoseconds was chosen for the circuit.

From table 2 it can be seen that the R, G and B signals have sufficient separation between the highest voltage requiring a '0' output and the lowest voltage for a '1' output. For example the comparator used the generate the R signal has to be able to generate a '0' output for Blue - which is 44 millivolts - while generating a '1' output for dark yellow which has a 62 millivolt input. The result is an 18 millivolt difference between blue and dark yellow.

The intensity signal cannot be easily derived from the three inputs as gray and dark yellow are actually supposed to be brighter than magenta and cyan. Special circuits are required to generate the necessary separations.

CIRCUIT DESCRIPTION:

The console already has a very good amplifier and D.C. restoration circuit for the Y signal. The R-Y and B-Y signals come directly from the video processor. Therefore the necessary circuits are provided on the converter board. Both circuits are identical.

Q1 and Q2 form a direct-coupled amplifier with a unity gain. The purpose is to delay the R-Y signal to match the delay of the Y amplifier in the console and also provide a low impedence source for Q3. Q3 is an emitter follower stage to provide a very low impedence source to the D.C. restoration circuit. Also, the bandwidth of Q3 is limited by the high bias current and serves to filter the high frequency noise from the R-Y signal. For some reason, the TMS9928A generates a large amount of high frequency "trash" on its outputs and this noise must be filtered out.

C1 and Q4 serve to lock the D.C. level of the signal to ground during the horizontal pulse, achieving a constant D.C. reference for the R-Y signal. Q4 is turned on during every sync pulse to force the output to a ground level while Q3 drives enough current to maintain C1 with correct charge.

Q9, Q10 and Q11 strip the sync pulses from the Y input and drive both the D.C. restoration circuits and generate a negative composite sync to the monitor. Q9 is an emitter follower to isolate the input and Q10 is capacitive coupled to strip the sync pulses. Q11 generates a negative 5 volt TTL level sync pulse and if a positive sync is needed it can be inverted with a TTL inverter.

This circuit generates a composite sync which may not match some monitors requiring separate syncs. There are

circuits which can separate the two syncs but in most cases the monitor will 'OR' the two separate syncs together to form a composite sync. If your monitor does this, either the horizontal or vertical sync input can be driven with the composite sync and the other input tied inactive.

After the R-Y and B-Y signals are amplified and D.C. restored they are mixed with the Y input and fed to the comparators. For example: the comparator used to generate the R signal is driven by a voltage divider between the R-Y and Y inputs. The output of this divider is ((R-Y)+Y)/2 and feeds the (+) input. The (-) input is connected to a 500 ohm potentiometer to set the threshold. Refering to table 2 it can be seen that with the threshold set at 53 millivolts the correct output will be generated.

The B comparator is identical to the R comparator while the G comparator is somewhat different. In this case the Y signal drives the (+) input and the (-) input is driven by a voltage divider between the two color signals. The threshold is set by an adjustable current source connected to the (-) input.

The I signal is derived from the Y input with additional circuits to generate a variable threshold. There is no single threshold which will work. Using the R, G and B signals, a variable threshold can be created.

Figure 3 shows the five groups of colors that need different thresholds. By making the correction shown in column 3 a common threshold of 84 millivolts is obtained.

The 74LS138 decodes four of the five color groups with just B being the fifth group. Since Red and Green need the same correction, they are 'OR'ed together by diodes D1 and D2. IC4 is a 7406 which is an open collector inverter to provide closely controlled up and down levels to resistors R7 to R30. These four resistors are connected to the comparator to switch the thresholds. For example: yellow is decoded on pin 10 of IC3. This causes pin 10 of IC4 to go to 5 volts during yellow or dark yellow and R30 then feeds enough current to the (-) input of the comparator to shift the threshold down 18 millivolts.

Conclusions:

The circuit generates very good R, G and B signals but under some cases the I signal is unstable. The NE521 comparator needs a 5 millivolt overdrive for fast operation. Because the two shades of yellow are only 8 millivolts apart, at best only 4mv of overdrive can be achieved for yellow. Furthermore, small changes in the D.C. restoration circuits will reduce the overdrive. Under some cases dark yellow, medium green and medium red will be slow or even hash-up. Fortunately these problem colors are typically only used for games and all the normal colors used for serious work are stable and sharp.

The resolution of all the high intensity colors and most of the low intensity colors is better than one pixel with no shadows. It is possible to define a character with a "AA55AA55A55AA55" pattern and display it with just about any foreground and background color combination. The checkerboard pattern will be displayed clearly!

I have included layouts for a two sided PC board so that the more adventuresome can etch their own circuit boards. A two layered card is required with the wiring on the back side and the voltage planes on the component side. The wiring image is a positive image, that is the lines on the final PC board should be the same as the wiring image. The voltage plane image is a negative which means that most of the copper is left on the PC board with only the lines being etched away.

The following procedure is how I made the PC board. First check the two wiring images to ensure they are both the same size! if not, one of them has

to be redrawn so they are the same. These images have gone through many steps from my originals to the one published here and have probably changed size. Start with the voltage plane image, it is already a negative so a transparent copy can be made by running it through a transparency maker. Make six transparencies and carefully stack them together as it takes about six to be opaque to the ultraviolet light needed to expose the photo-resist. Sensitize the copper clad board with negative type photo resist and use the foils to expose the photo resist. After the photo resist is developed the wiring image can be transfered to the back side.

To transfer the positive wiring image I used a Meadowlake TEC-200 film. Meadowlake film is a heat resistant film which has the unique property of not allowing copy toner to be fused to it. To make a PC board simply run the Meadowlake film through a copier to copy the wiring image to the film. Then use a flat iron to transfer the image from the film to the copper clad board. The result is the same as if the PC board was run through the copier and the image is etch resistant.

After the board is etched, drill out all of the holes and solder in the jumper wires. There are two kinds of jumpers, those that only jumper between the two sides of the board and those that connect lands on the back side. Most of the components are only soldered on the back side but some like Q3 must be soldered directly to the voltage planes on the component side. Some parts like C18 also serve as jumpers between sides and have to be soldered on both sides of the board.

The two power supplies must be well regulated and not have any thermal drift. I used the circuit in figure 4 with large heat sinks on the regulators to generate the +5 and -5 volt supplies.

The cable between the console and the converter circuit should be well shielded and as short as possible - not longer than 12". The audio signal should be separated from the video signals as these tend to cross talk (noise from one will interfere with signals on the other) thus neither will be very satisfactory.

Setting the three potentiometers for the R, G and B signals is just a matter of trial and error and is fairly easy. The intensity signal is harder to adjust as resistors R27 - R30 must also be selected. First start with the values shown. As the potentiometer is turned in the direction to make the colors into low intensity the order they should turn dark are: light yellow, light red, light green, blue, magenta and white. Turning the potentiometer in the other direction should make the following dark colors turn bright in this order: yellow, dark blue, med green, med red and gray. Resistors R27 to R30 must be selected to match each individual TMS9928A video processor as the output levels of the three signals will vary by small amounts and the circuit is sensitive to small changes.

For those who do not want to make their own PC board, my son has agreed to make them for $17.00. This includes postage and an instruction package. I also have a few TMS9928A video processors available for $12.00 which includes circuit diagrams, spec sheets and some other information.

Meadowlake film is available from:

Meadowlake Corporation
PO Box 497
Northport, NY 11768

The price for 5 sheets of TEC-200 film is $3.95 + $1.00 postage.

Good luck. You can reach me at the following address by mail for assistance.

Steven Schmitt
2306 10th Ave. NW
Rochester, MN 55901

RGBI COLORS	TI 99/4A COLORS	R	G	B	I
RED	RED	1	0	0	1
BLUE	BLUE	0	0	1	1
GREEN	GREEN	0	1	0	1
CYAN	CYAN	0	1	1	1
MAGENTA	MAGENTA	1	0	1	1
YELLOW	YELLOW	1	1	0	1
WHITE	WHITE	1	1	1	1
BLACK	BLACK	0	0	0	X
DARK RED	DARK RED	1	0	0	0
DARK BLUE	DARK BLUE	0	0	1	0
DARK GREEN	DARK GREEN	0	1	0	0
DARK CYAN		0	1	1	0
DARK MAGENTA		1	0	1	0
DARK YELLOW	DARK YELLOW	1	1	0	0
GRAY	GRAY	1	1	1	0
TRASPARENT	TRANSPARENT				
	MED. RED				
	MED. GREEN				

FIGURE 1

COLOR	R-Y	B-Y	Y	R	B	G	RGBI
	mv	mv	mv	mv	mv	mv	
CYAN	-60	44	100	20	72	108	0111
DARK RED	60	-8	72	66	32	46	1000
GREEN	-30	-12	92	31	40*	113	0101
BLACK	12	16	28	20	22	14	000X
YELLOW	24	-28	108	66	40	110	1101
DARK GREEN	-36	-18	74	19	28	101	0100
MAGENTA	46	40	80	63	60*	37	0111
WHITE	10	14	126	68	70	114	1111
DARK BLUE	0	80	68	34	74	28	0010
MED GREEN	-50	-24	80	15	28	117	0100
MED RED	68	-14	80	74	33	53	1000
GRAY	10	14	106	58	60	94*	1110
BLUE	8	72	80	44*	76	40	0011
RED	68	-14	94	81	40	67*	1001
DARK YELLOW	24	-22	100	62*	39	99	1100

$$R = (R-Y) + Y, \quad B = (B-Y) + Y, \quad G = Y - \frac{(R-Y) + (B-Y)}{2}$$

FIGURE 2

COLOR	Y LEVEL in MV's	CORRECTION	NEW Y LEVEL
DARK RED MED RED RED	75mv 80mv 94mv	Subtract 3mv	72mv 77mv 91mv
DARK GREEN MED GREEN GREEN	74mv 80mv 94mv	Subtract 3mv	72mv 77mv 91mv
BLACK WHITE GRAY	28mv 124mv 104mv	Subtract 30mv	94mv 76mv
YELLOW DARK YELLOW	106mv 98mv	Subtract 18mv	88mv 80mv
MAGENTA DARK BLUE BLUE CYAN	80mv 66mv 80mv 98mv	Add 12mv	92mv 78mv 92mv 110mv

FIGURE 3

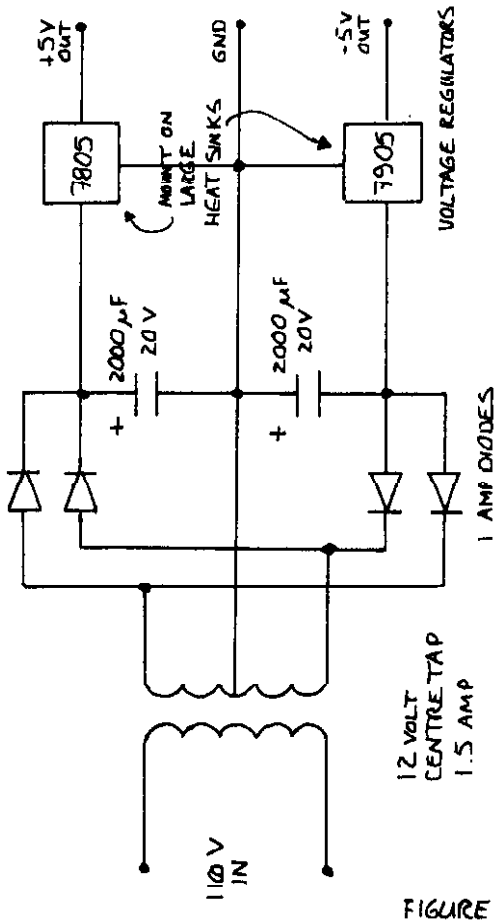

FIGURE 4

D.H.D. 4/22/87

WIRING SIDE
POSITIVE

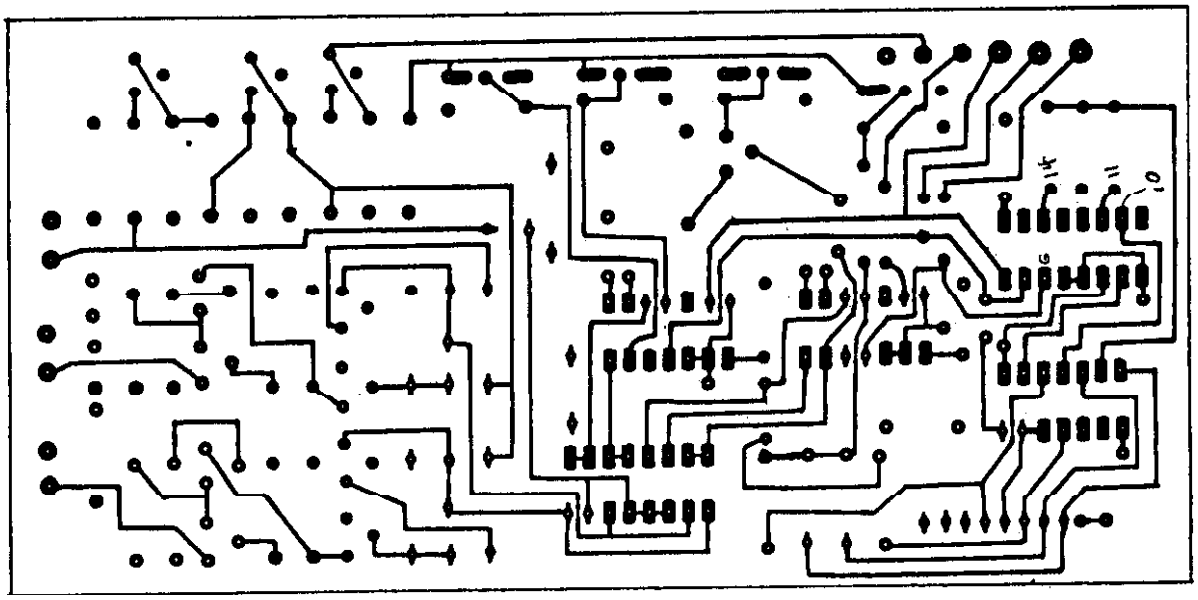

COMPONET SIDE
NEGATIVE

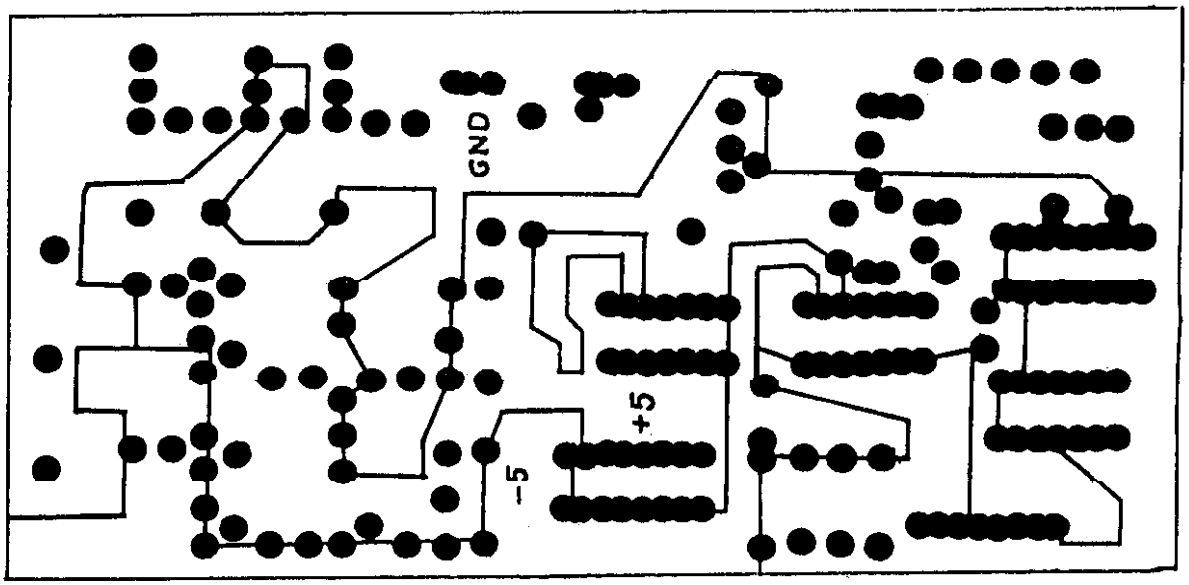

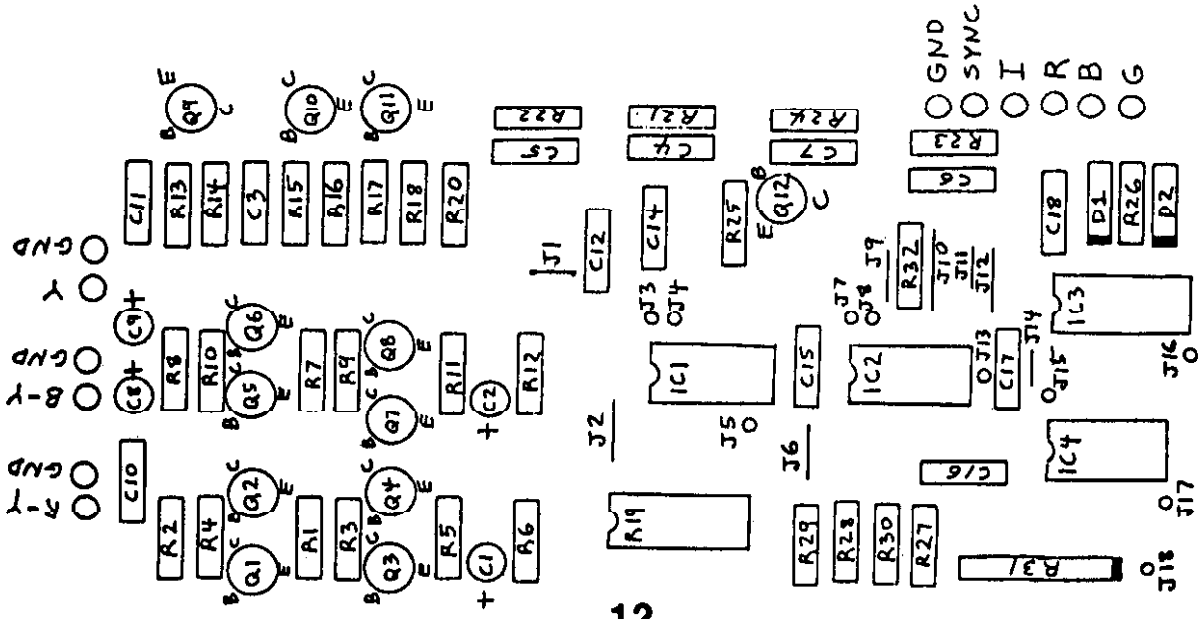

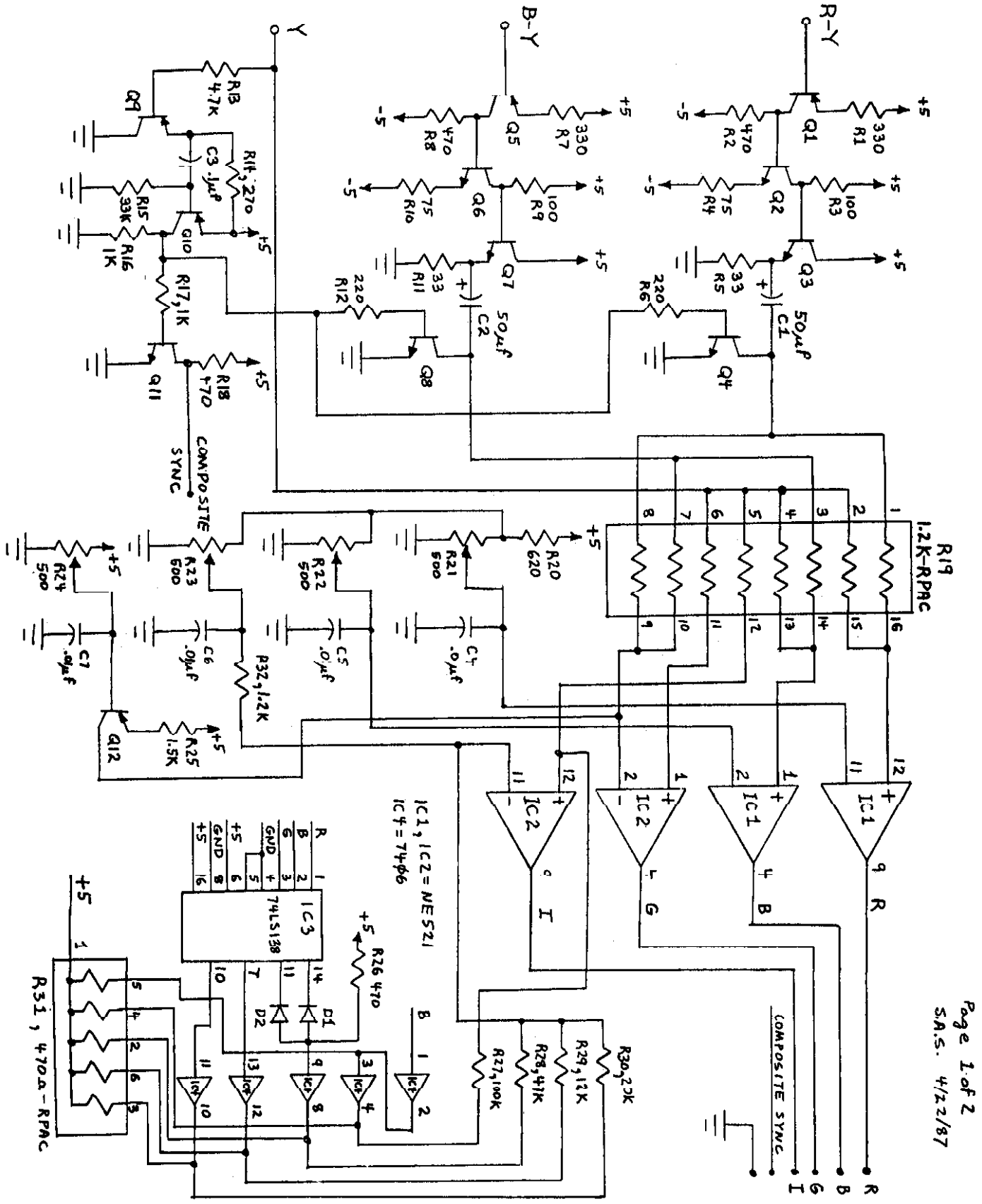

Page 1 of 2
S.A.S. 4/22/87

S.A.S. 4/22/87

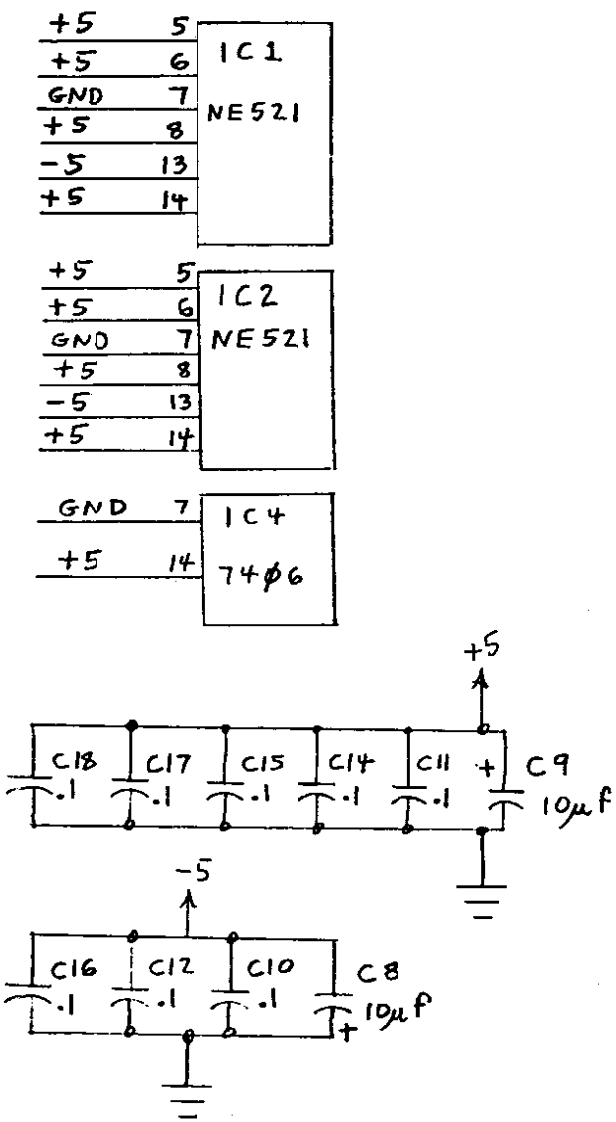

R1, R7 - 330Ω
R2, R8, R18, R26 - 470Ω
R3, R9 - 100Ω
R4, R10 - 75Ω
R5, R11 - 33Ω
R6, R12 - 220Ω
R13 - 4.7K
R15 - 33K
R16, R17 - 1K
R20 - 620Ω
R21, R22, R23, R24 - 500Ω pot.
R25 - 1.5K
R27 - 100K
R28 - 47K
R29 - 12K
R30 - 20K
R19 - 1.2K RPAC, 16pin DIP
R31 - 470Ω RPAC, 9pin SIP
R14 - 270Ω
R32 - 1.2K

C3 - .1μf
C4, C5, C6, C7, C10, C11, C12
C14, C15, C16, C17, C18 } .1μf or .01μf Bypass Caps
C8, C9 - 10μf
C1, C2 - 50μf

IC1, IC2 SIGNETICS NE521
IC3 74LS138
IC4 74φ6

J1 to J13 - Jumper Wires

Q1, Q5, Q9, Q10, Q12
2N3906

Q2, Q6 - 2N3904

Q3, Q4, Q7, Q8, Q11
2N2222

64k MEMORY MAP MODIFICATION

(Taken off the GEnie bulletin board on the 18th of May, 1987)..Nelson Byrne
---

Category 1, Topic 1
Message 570 Sun May 17, 1987 J.CLULOW [Buh'Wheat] at 09:14 EDT

Steve T:
----- -

As to what Mike Ballmann's 64K 16 bit bus modification for the console is, I thought I'd put my reply here in the BB (in case RYTE or anyone else is interested). To do it you need two 32K byte memory chips (I used the Hitachi 62256 but the NEC would be OK too) and a 74LS21 and 74LS153. Total cost around $27. These four IC's get piggybacked on other IC's on the console PC board, and then you have to solder in some jumpers.

As of right now Mike's mod does replace the 32K card, and you would have to pull the 32K card out of the PEB. The data lines are on the 16 bit data bus and do not have to go through the 16 to 8 bit converter circuit as do the 32k or 128k+ memory card or the "matchbox" 32K projects with 6264's that have been put various places. Mike's mod actually adds 32K WORDS (64K bytes of RAM) of which 16K words (32K bytes) are in the 32K memory expansion space and in use now. That's why the mod gives you a 50% increase in speed -- all of a sudden your whole 32K is running like that precious 256 bytes of CPU PAD at >8300 - >83FF.

BUT, as if that weren't enough, Mike is also working on switching in the other four 8K blocks! There's one 8K block for every 8K block in the TI address space (64K). Right now only the four blocks for the 32K memory are in use, though. Mike is sending preliminary schematics for a board that will go in the console and take care of switching in the REMAINING four blocks. I'm not sure just how it will work, but I guess it will switch out the corresponding console blocks.

Anyway, the point is that aside from having a faster computer with 32K there are going to be a number of additional developments with this project. If you decide to do it, let me know when you get your IC's (you'll also need that spare black and silver console). Then I'll take my console apart and make up a set of step by step instructions with pin numbers, every jumper, how to do the piggybacking etc. The whole mod would take about an hour and a half to do (it took me a lot longer because I made lots of stupid mistakes.)

Rather than try for the 32K on the DSR card, I'd go for Mike's mod if I were you. It's got a lot more potential and would actually be simpler to do.

Okay folks, this project is just what the Doctor ordered... a true bankswitching project for the venerable 99/4A. As noted, a board to take care of most of the circuitry would be necessary or desireable to avoid mistakes and make the entire project easier.

From experience, this would cost under $800 for the actual CAD work - once the finalized design was completed. From there, the cost of each board depends entirely on how many finished boards are ordered. So we're back to the question: how many people are interested enough to:

A) write a letter
B) spend the necessary $$$
C) invest the time & parts needed

I would imagine that a clever bank switching scheme done under software control would allow an impressive array of super powerful to be implimented on the 99/4A... totally compatible with existing programs without a large purchase price.

The nagging question is one of who would write software to take advantage of this type of modification done on "x" number of consoles. How many of your non-tech friends would have this mod done?

R/D COMPUTING is published monthly by Ryte Data in Haliburton, Ontario. Copyright 1985.

All material is from sources believed to be accurate. The publisher takes no responsibility for errors, omissions or misprints. Articles may be reprinted with credits giving source and address by users groups for publication.

Articles dealing with Texas Instruments 99/4A and 9900 based computers are published. Special attention is given to projects and information on upgrading and modifying the 99/4A console and system.

Please send any information on products, hardware, software, or modifications to our address. We cannot accept responsibility for materials submitted and, unless stated otherwise, will assign all manuscripts etc. for publication.

Only manuscripts with sufficient postage and self-addressed mailer will be returned.

Un-classified ad rates are $1.25 per 40 character line. Count ALL characters, spaces, etc. and submit with payment to our address. Ads are run in order received. Deadline is 21st of each month.

YOU MUST NOTIFY US OF YOUR CHANGE OF ADDRESS SIX WEEKS IN ADVANCE. PLEASE SEND A CHANGE OF ADDRESS CARD WITH YOUR OLD AND NEW ADDRESS.

SUBSCRIPTION COST:

$14.00 (US) for 12 issues $20.00 Cdn. all via First Class Mail.
$19.00 (US) overseas Airmail Delivery.

BACK ISSUES:

Back issues are available for $2.00 each, **subscribers** only for these issues —

- **V 2** sold out.
- **V 3** TMS 9995 Memory Map & specs numeric keypad project.
- **V 4** XB II **plus** by Mechatronic, Myarc 128k card, Autofire joystick project.
- **V 5** 32k internal memory project, DS/DD Ramdisk, Auto power-up project.
- **V 6** Myarc 256k computer, "C" compiler, RAM/GRAM card.
- **V 7** Maximem review, EEROM programmer, Sense and control card.
- **V 8** Sold out.
- **V 9** Dual disk controller project, RESET switch project.
- **V 10-11** Double issue: LA TI FAIR, Bill Gronos on Assembly, Super load switch, EPROM programmer.
- **V12.5** Myarc 640k Geneve, Console speed upgrade, Video monitor filter, Gramkracker review, ATRONIC products.
- **V14.5** Expansion Box 8k 'module,' Super Clock Support, Basic Compiler, 9938 Video Chip.
- **V15** Video upgrade @ 15mHz, Quad Density TI Disk Controller, 80 Column Display preview.
- **V16** P Box Modification, Multi-Module project.
- **V17** Tigercub, Eprommer update, Quad density update.
- **V18** Power Supply, RAVE 99 Keyboard, Year Review.
- **V19** Geneve, c993.0, RAM Disk backup, Hi-Speed cassette.
- **V20** 99AT, T.O.D., Horizon modification, Rapid Copy 32k project, GRAM card software, etc.
- **V21** Expansion system, 8k DSR RAM Project, C99 by R. Albright, TI Writer in Memory, AE1 etc.
- **V22** EEPROMS, C99 part II, File Utiliter, Command DOS, 8k DSR RAM part II.
- **V23** Hardware group, co-processors, Improved Video, Real Time Clock, C99 part III, Memory LED's.
- **V24** Triple Tech project, 80 Column Display II, RGB Conversion Project Part II, 64k
- **V25** German GRAM CRACKER, Co-processor update, Proto Board, Console Calc., etc. 64k on the bus project.

Ryte Data
210 MOUNTAIN STREET
HALIBURTON, ONTARIO K0M 1S0
705 457-2774